⚠ WARNING

All repairs, adjustments and maintenance not described in the Operator's Manual must be performed by qualified service personnel.

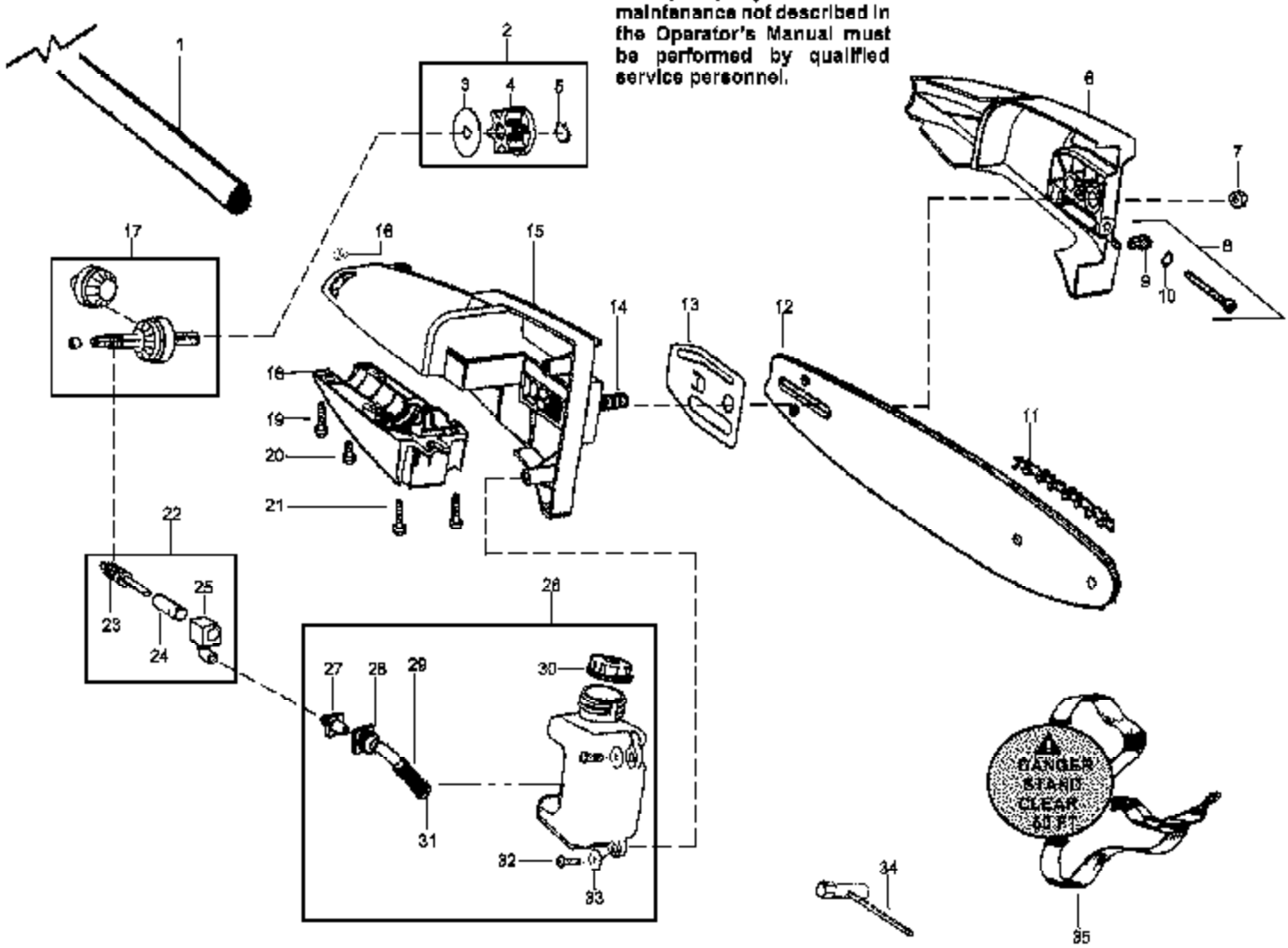

Ref #	Part Number	Qty	Description
1	530096062		Assy-Driveshaft
2	530071647		Kit-Sprocket Assy. (Incl. 3,4,5)
3	530056521		Washer
4	530056520		Sprocket
5	530056563		Retainer-Sprocket
6	530057100		Assy-Bar Clamp (Incl. #8)
7	530015917		Nut-Bar Mounting
8	530069611		Kit-Bar Adjust (Incl. 9,10)
9	530015826		Pin-Bar Adjust
10	530038593		Retainer-Bar Adjust
11	530051524		Chain-8"
12	530044908		Bar-8"
13	530056523		Plate-Bar pad
14	530016133		Bolt-Bar
15	530056513		Hsg.-Upper (Incl. #14)
16	530016284		Nut
17	530071646		Kit-Gear Assy
18	530056514		Hsg.-Lower
19	530016312		Screw
20	530015805		Screw-Align
21	530015886		Screw
22	530071645		Kit-Oil Assy (Incl. 23,24,25)
23	530053764		Assy-Gear Plunger
24	530053765		Barrel
25	530056522		Block-Oil
26	530056528		Assy-Oil Tank (Incl. 27-31)
27	530056524		Fitting-Oil Line
28	530021160		Intake-Oil Line
29	530037821		Filter-Oil
30	530053072		Cap-Oil
31	530030189		Plug-Oil Filter
32	530015886		Screw
33	530015382		Washer
34	530031163		Wrench-Bar
35	530094417		Strap-Shoulder
	530163467		Manual Not Shown
	530095894		Att-Hanger Not Shown
	530055395		Clamp-Harness(lower) Not Shown
	530055392		Clamp-Harness(upper) Not Shown
	530015770		Screw-Harness clamp Not Shown