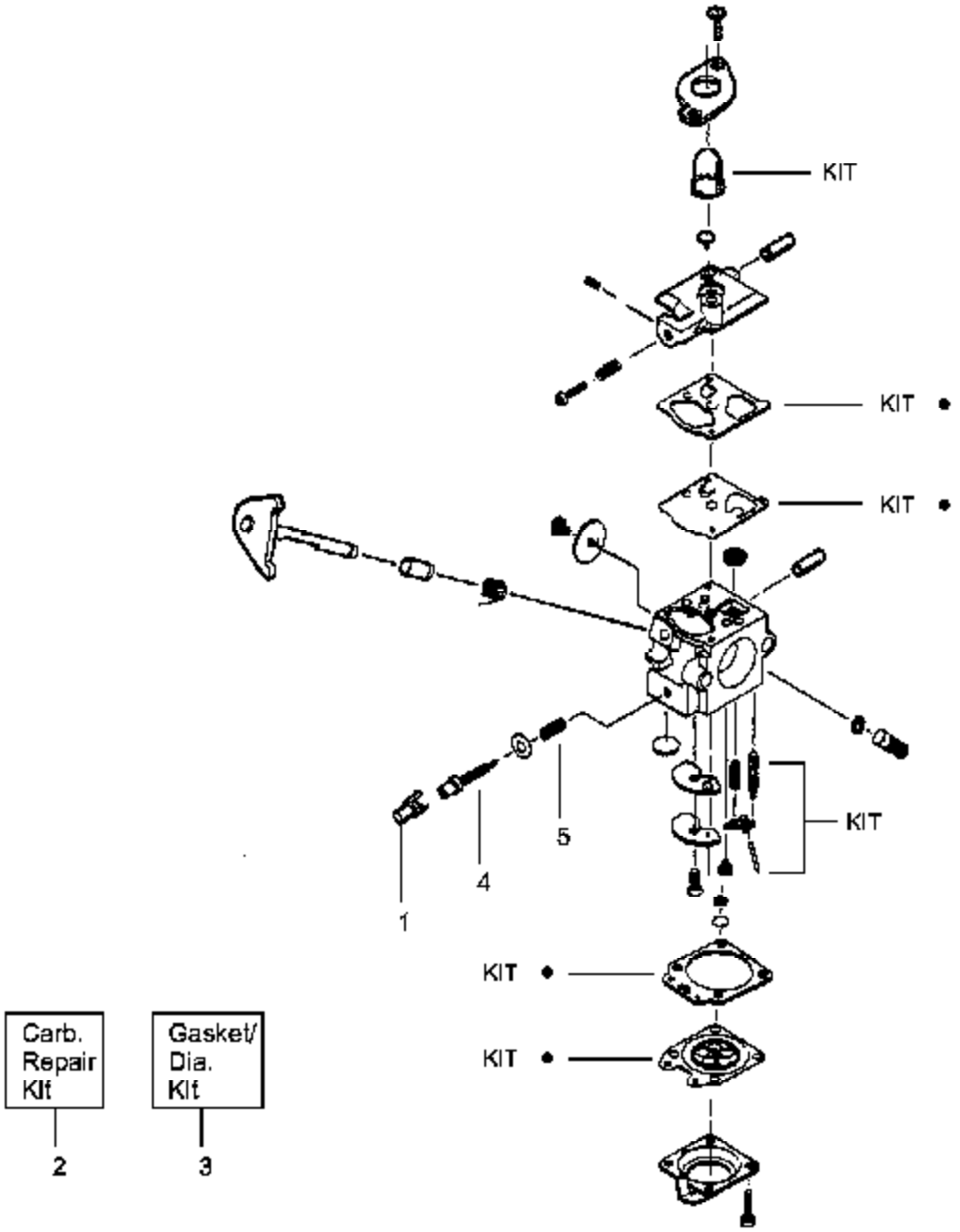
KIT
KIT •
KIT •
KIT
KIT •
KIT •
1
4
5
Carb. Repair Kit
2
Gasket/ Dia. Kit
3

Ref #	Part Number	Qty	Description
1	530038404		Limiter Cap
2	530069842		Carburetor Repair Kit (KIT = Indicates Contents)
3	530069844		Gasket Diaphragm Kit (DOT = Indicates Contents)
4	530035341		Needle-Idle
5	530035342		Spring-Idle Needle
	530069754		Carburetor Assembly WA-226

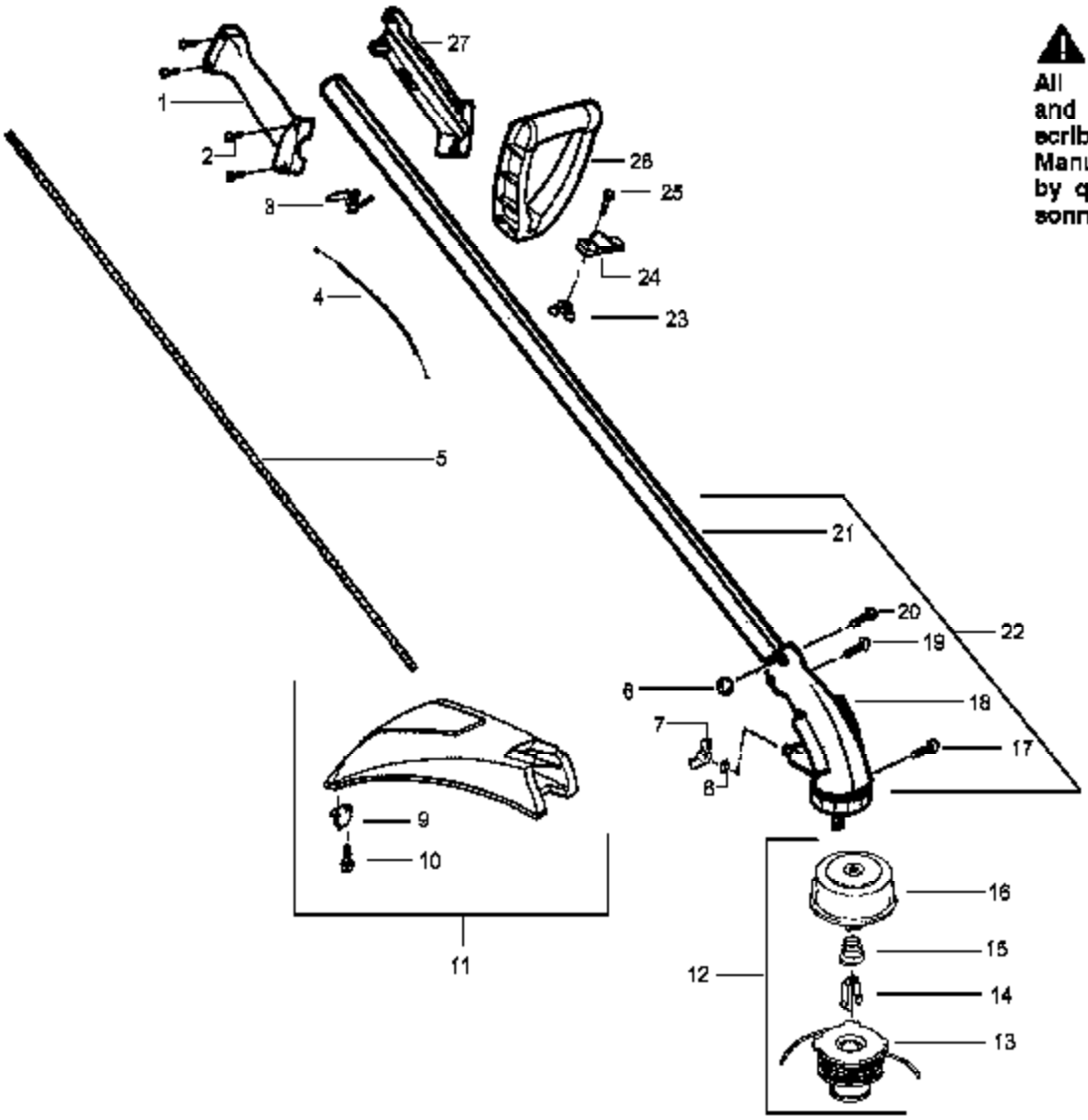

⚠ WARNING

All repairs, adjustments and maintenance not described in the Operator's Manual must be performed by qualified service personnel.

Ref #	Part Number	Qty	Description
1	530038581		Throttle Hsg. (Right)
2	530016273		Screw-Throttle Hsg.
3	530038682		Trigger
4	530036744		Assy-Throttle Cable
5	530095391		Flex-Drive Shaft
6	530016284		Locknut-Gear Box
7	530016225		Wingnut-Gear Box
8	530092062		Washer
9	530052286		Line Limiter
10	530015880		Screw-Line Limiter
11	530069752		Kit-Shield Ass'y. (Incl. 9 & 10)
12	952711566		Accy-Cutting Head Ass'y. (Incl. 13-16)
13	952711548		Accy-Spool w/Line
14	530401957		Clip-Retainer
15	530053241		Spring
16	530071306		Kit-Hub Ass'y
17	530016202		Screw
18	530095638		Assy-Gear Box
19	530016224		Screw
20	530016312		Screw
21	530071303		Assy-Drive Shaft Hsg.
22	530053000		Kit-Gearbox/Shaft (Incl. #18 & 21)
23	530016118		Wingnut-Handle
24	530094742		Clamp-Handle
25	530015820		Bolt-Handle
26	530038708		Assist Handle
27	530038580		Throttle Hsg. (Left)
	530088826		Operator Manual Not Shown
	530055350		Shaft Warning Decal Not Shown

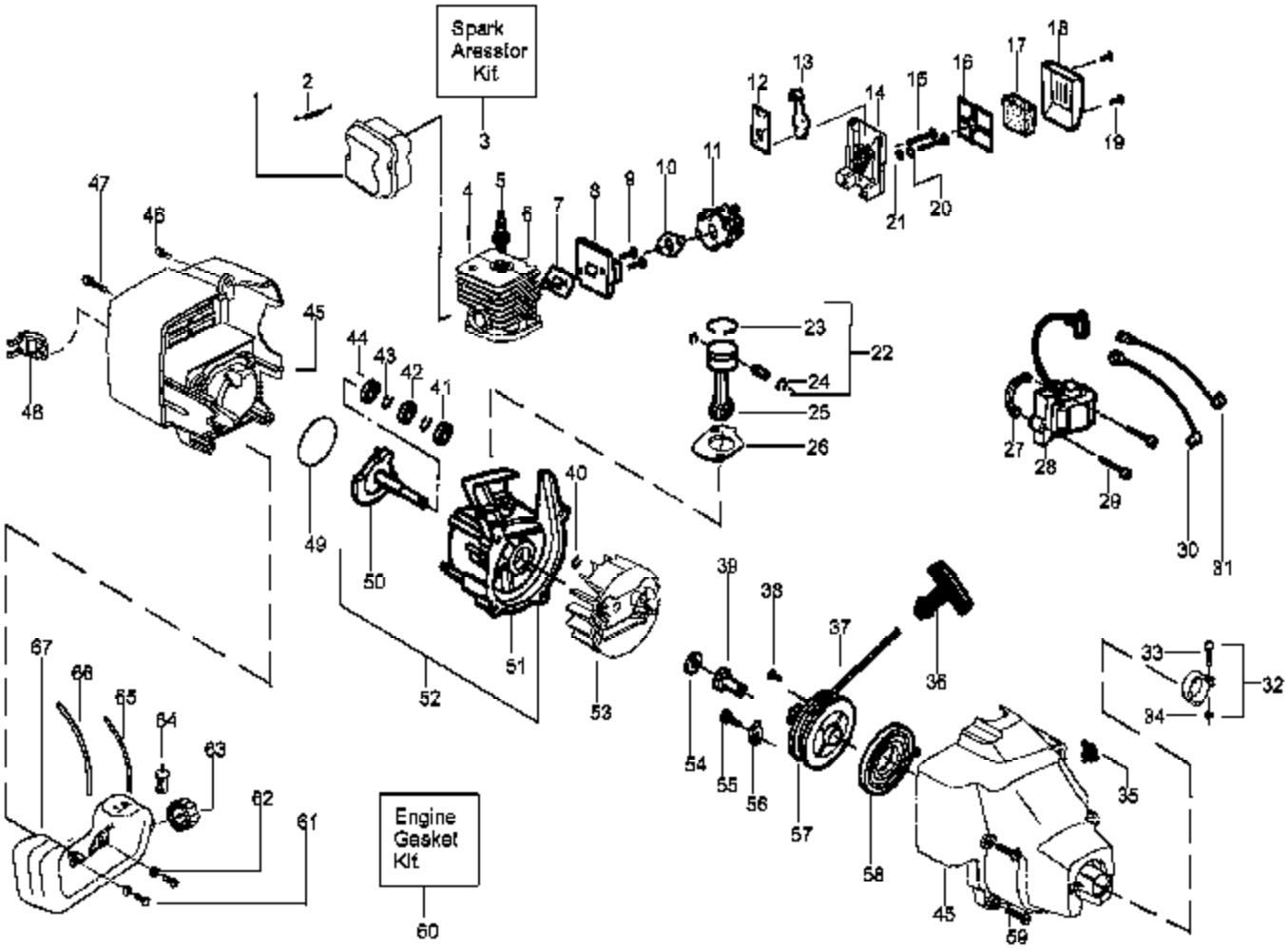
Spark Arrestor Kit
3
Engine Gasket Kit
60
2
4
5
6
7
8
9
10
11
12
13
14
15
16
17
18
19
20
21
22
23
24
25
26
27
28
29
30
31
32
33
34
35
36
37
38
39
40
41
42
43
44
45
46
47
48
49
50
51
52
53
54
55
56
57
58
59
61
62
63
64
65
66
67

Ref #	Part Number	Qty	Description
1	530071390		Kit - Muffler (Incl. 2,3)
2	530042088		Spring-Muffler
3	530071391		Kit-Spark Arrestor
4	530015953		Screw-Cylinder
5	952030201		Spark Plug (RCJ 8Y)
6	530069757		Kit - Cylinder
7	530069913		Gasket-Cylind./Carb.
8	530049301		Adapter-Carb.
9	530016014		Screw
10	530069913		Gasket-Carb.
11	530069754		Kit - Carburetor Ass'y (Incl. Limiter Cap)
12	530038747		Choke Plate Mounting
13	530038686		Shutter-Choke
14	530052431		Air Box
15	530015887		Screw
16	530036569		Plate - Filter Support
17	530036575		Foam-Air Filter
18	530036568		Cover-Air Filter
19	530015880		Screw
20	530015852		Spacer-Choke
21	530015254		Washer
22	530069987		Kit - Piston (Incl. 23, 24 & Pin)
23	530053565		Piston Ring
24	530015162		Retainer-Piston Pin
25	530069615		Assy-Connecting Rod
26	530069913		Gasket-Cylinder
27	530036145		Spacer-Module
28	530055160		Ignition Module
29	530015954		Screw
30	530014662		Assy-Ground Wire
31	530014663		Assy-Leadwire
32	530038720		Assy-Nose Cone Clamp (Incls. 33 & 34)
33	530015650		Screw-Nose Cone
34	530016124		Nut-Nose Cone
35	530071356		Kit-On/Off Switch
36	530027569		Handle-Starter
37	530069232		Kit - Rope
38	530016080		Screw
39	530038604		Coupling-Drive
40	530015941		Retain. Ring-C'shaft
41	530032124		Outer Bearing
42	530019179		C'case Seal
43	530015945		Retainer Ring-C'case
44	530032125		Inner Bearing
45	530069685		Assy.-Fan Hsg/Shroud
46	530015934		Screw
47	530015810		Screw
48	530054536		Guard-Muffler
49			O-Ring-C'case/Shrd Refer to "Featherlite SST 25HO Gas Trimmer Service Reference" in literature for more information.
50	530054083		Assy-Crankshaft
51	530012414		Assy-Crankcase (Incl. 41-44)
52	530014729		Assy-C'case & C'shaft (Incl. 40,50,51)
53	530069886		Assy-Flywheel
54	530015828		Washer-Flat

Ref #	Part Number	Qty	Description
55	530015775		Screw
56	530027523		Retainer-Can
57	530069400		Kit-Starter Pulley (Incl. 39)
58	530042085		Spring-Starter
59	530015810		Screw
60	530069913		Kit-Engine Gasket (Incl. 7,10,26,49)
61	530015886		Screw
62	530016131		Washer
63	530014347		Assy-Fuel Cap
64	530095646		Assy-Fuel Pickup
65	530069247		Kit-Fuel Line (Small)
66	530069216		Kit-Fuel Line (Large)
67	530049379		Assy-Fuel Tank (Incl. filter, lines & fuel cap)